EVAL-FR10DHIR

DC-10 MBd RedLink Evaluation Board User Guide

OVERVIEW

The EVAL-FR10DHIR mini evaluation board enables evaluation and rapid prototyping of the Firecomms RedLink® DC-10 MBd inverting receiver for plastic optic fiber (POF) and large core glass fiber (200, 400 µm PCS). The board includes a single RedLink® receiver pre-mounted onto a simple PCB that allows easy application of DC power and monitoring of the output signal via a standard 0.1-inch header.

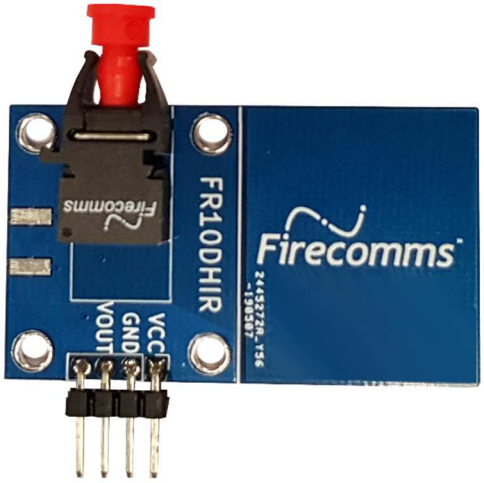

When paired with a transmitter evaluation board such as the EVAL-FT10MHNR, the EVAL-FR10DHIR can be used to quickly prototype and evaluate an optical link.

The unpopulated footprint (J2) for a PCB mounted SMA connector has been added to allow a secure connection to lab equipment such as a Bit Error Rate Tester (BERT).

INITIAL SETUP

1. Connect 3.3/5 V to the Rx VCC header (J1 - Pin 1)

2. Connect GND of a DC power supply to the ground pin of the PCB header (J1 - Pin 3)

3. To monitor Vout, connect to an oscilloscope channel with a 1 MΩ high impedance probe (J1 - Pin 3)

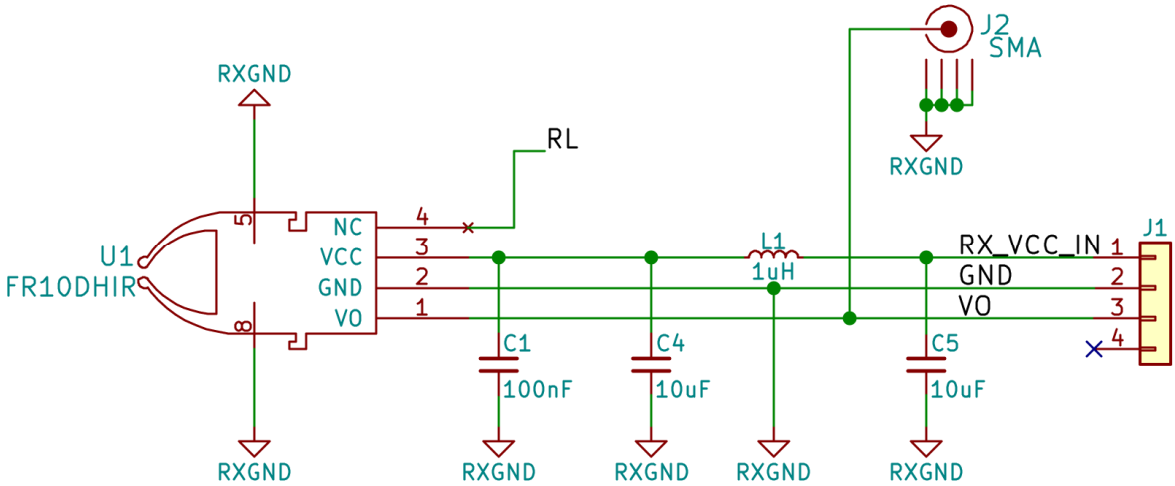

FIGURE 1
Evaluation Board Schematic